GST NO.: 29AHZPU5620Q1ZZ

An ISO 9001:2015 Certified Company

ROYAL INDUSTRIAL SUPPLIERS

QUALITY FASTENERS SPECIALIST

8310165941 / 9959457863 sales@royalfastenersindia.com www.royalfastenersindia.com

TECHNICAL DATA SHEET

BROACHING PRESS NUT KF S2



MATERIAL- STAINLESS STEEL

GRADE-SS304 (A2)

AS PER-NON-STANDARD

CATALOGUE NO. R4S14u

UNIFIED SERIES

INSTALLATION GUIDE

- VERIFY THE PRESS NUT SIZE, THREAD PITCH, MATERIAL GRADE, AND PANEL THICKNESS BEFORE INSTALLATION.
- ENSURE THE ROUND BROACHING PRESS NUT IS SUITABLE FOR THE BASE MATERIAL AND APPLICATION.
- INSPECT THE NUT FOR THREAD DAMAGE, DEFORMATION, OR SURFACE DEFECTS.
- PREPARE THE MOUNTING HOLE ACCORDING TO THE MANUFACTURER'S SPECIFIED DIAMETER AND TOLERANCES.
- ENSURE THE MOUNTING HOLE IS CLEAN AND FREE FROM BURRS, DUST, OIL, AND DEBRIS.
- POSITION THE PRESS NUT CORRECTLY OVER THE PREPARED HOLE WITH THE THREAD AXIS PROPERLY ALIGNED.
- USE A SUITABLE PRESS MACHINE AND MATCHING INSTALLATION TOOL FOR THE NUT SIZE.
- ENSURE THE PRESS NUT AND PANEL ARE PROPERLY ALIGNED BEFORE APPLYING PRESSURE.
- APPLY CONTROLLED PRESSURE TO EMBED THE BROACHING FEATURES INTO THE PANEL MATERIAL AS PER THE MANUFACTURER'S RECOMMENDATIONS.
- ENSURE THE NUT IS PRESSED STRAIGHT WITHOUT TILTING OR MISALIGNMENT.
- AVOID EXCESSIVE PRESSURE, AS IT MAY DAMAGE THE NUT, PANEL, OR THREADS.
- ENSURE THE NUT IS FULLY SEATED AND FIRMLY SECURED IN THE PANEL.
- CHECK THAT THE INSTALLED NUT DOES NOT ROTATE OR PULL OUT DURING THE REQUIRED APPLICATION TEST.
- VERIFY THAT THE MATING SCREW THREADS ENGAGE SMOOTHLY WITHOUT CROSS-THREADING.
- INSPECT THE FINAL ASSEMBLY FOR PROPER SEATING, THREAD CONDITION, AND SECURE INSTALLATION.

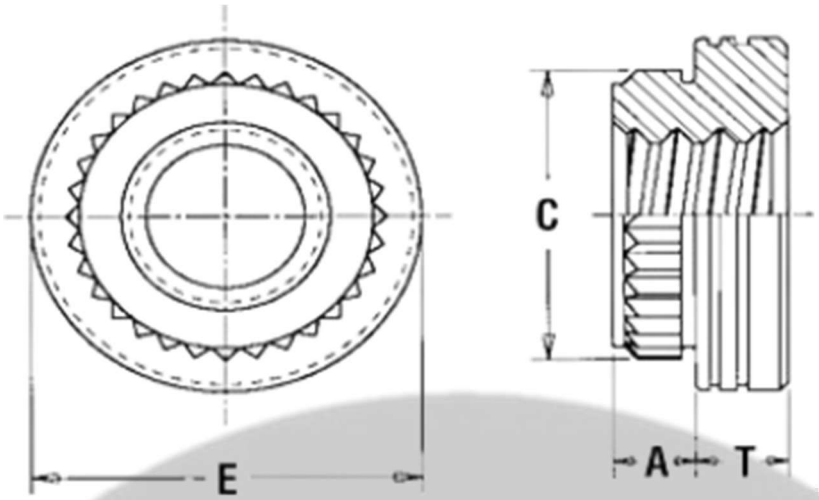

Quote the PART NUMBER given below with your order/ inquiries: **All Dimensions in mm**

Size (d)→	Part Number	A shank Max (min sheet thickness)	Hole size in sheet +0.003	C	E	T
#2-56	R4S14u25601	0.060	0.147	0.165	0.219	0.065
#4-40	R4S14u44001	0.060	0.166	0.184	0.219	0.065
#6-32	R4S14u63201	0.060	0.213	0.231	0.281	0.065
#8-32	R4S14u83201	0.060	0.250	0.268	0.344	0.096
#10-32UNF	R4S14v13201	0.060	0.272	0.290	0.375	0.127

Sizes in BLUE are non-preferred. Availability is limited and MOQ is applied. *Data is strictly informative*

Note: All Austenitic Stainless-Steel Fasteners may exhibit some Magnetic Properties due to the Manufacturing Process.
Refer: ISO 3506-2 Annex F