GST NO.: 29AHZPU5620Q1ZZ

An ISO 9001:2015 Certified Company

ROYAL INDUSTRIAL SUPPLIERS

QUALITY FASTENERS SPECIALIST

8310165941 / 9959457863 sales@royalfastenersindia.com www.royalfastenersindia.com

TECHNICAL DATA SHEET

BROACHING PRESS NUT KF S2



MATERIAL- STAINLESS STEEL

GRADE-SS304 (A2)

AS PER-NON-STANDARD

CATALOGUE NO. R4S14

INSTALLATION GUIDE

- VERIFY THE PRESS NUT SIZE, THREAD PITCH, MATERIAL GRADE, AND PANEL THICKNESS BEFORE INSTALLATION.
- ENSURE THE ROUND BROACHING PRESS NUT IS SUITABLE FOR THE BASE MATERIAL AND APPLICATION.
- INSPECT THE NUT FOR THREAD DAMAGE, DEFORMATION, OR SURFACE DEFECTS.
- PREPARE THE MOUNTING HOLE ACCORDING TO THE MANUFACTURER'S SPECIFIED DIAMETER AND TOLERANCES.
- ENSURE THE MOUNTING HOLE IS CLEAN AND FREE FROM BURRS, DUST, OIL, AND DEBRIS.
- POSITION THE PRESS NUT CORRECTLY OVER THE PREPARED HOLE WITH THE THREAD AXIS PROPERLY ALIGNED.
- USE A SUITABLE PRESS MACHINE AND MATCHING INSTALLATION TOOL FOR THE NUT SIZE.
- ENSURE THE PRESS NUT AND PANEL ARE PROPERLY ALIGNED BEFORE APPLYING PRESSURE.
- APPLY CONTROLLED PRESSURE TO EMBED THE BROACHING FEATURES INTO THE PANEL MATERIAL AS PER THE MANUFACTURER'S RECOMMENDATIONS.
- ENSURE THE NUT IS PRESSED STRAIGHT WITHOUT TILTING OR MISALIGNMENT.
- AVOID EXCESSIVE PRESSURE, AS IT MAY DAMAGE THE NUT, PANEL, OR THREADS.
- ENSURE THE NUT IS FULLY SEATED AND FIRMLY SECURED IN THE PANEL.
- CHECK THAT THE INSTALLED NUT DOES NOT ROTATE OR PULL OUT DURING THE REQUIRED APPLICATION TEST.
- VERIFY THAT THE MATING SCREW THREADS ENGAGE SMOOTHLY WITHOUT CROSS-THREADING.
- INSPECT THE FINAL ASSEMBLY FOR PROPER SEATING, THREAD CONDITION, AND SECURE INSTALLATION.

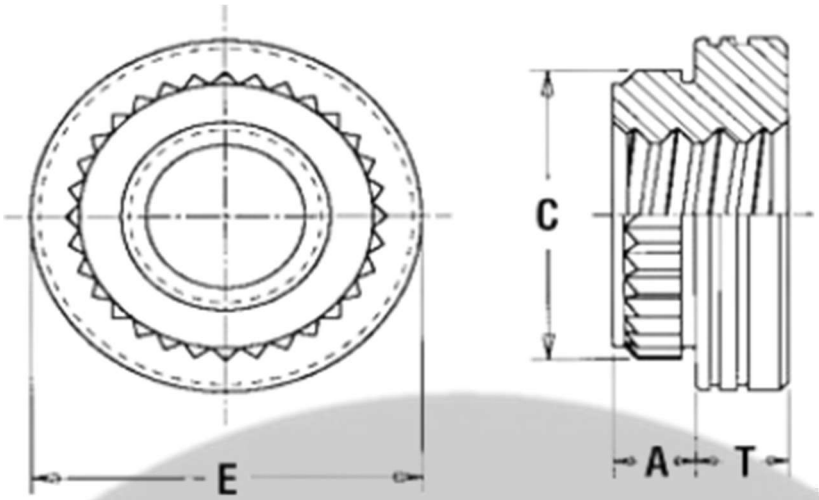

Quote the PART NUMBER given below with your order/ inquiries: **All Dimensions in mm**

Size (d)→	Part Number	A shank Max = min sheet thickness	Hole size in sheet +.08	C	E	T
M2x0.4	R4S1402001	1.53	3.73	4.19	5.56	1.50
M2.5x0.45	R4S1420501	1.53	4.22	4.68	5.56	1.50
M3x0.5	R4S1403001	1.53	4.22	4.68	5.56	1.50
M4x0.7	R4S1404001	1.53	6.40	6.81	8.74	2.00
M5x0.8	R4S1405001	1.53	6.90	7.37	9.53	3.00
M6x1.0	R4S1406001	1.53	8.00	8.30	10.00	4.10

Sizes in BLUE are non-preferred. Availability is limited and MOQ is applied. ***Data is strictly informative***

Note: All Austenitic Stainless-Steel Fasteners may exhibit some Magnetic Properties due to the Manufacturing Process.
Refer: ISO 3506-2 Annex F