GST NO.: 29AHZPU5620Q1ZZ

An ISO 9001:2015 Certified Company

ROYAL INDUSTRIAL SUPPLIERS

QUALITY FASTENERS SPECIALIST

8310165941 / 9959457863 sales@royalfastenersindia.com www.royalfastenersindia.com

TECHNICAL DATA SHEET

HEX PRESS NUT



MATERIAL- STAINLESS STEEL

GRADE-SS304 (A2)

AS PER-NON-STANDARD

CATALOGUE NO. R4D15P

INSTALLATION GUIDE

- VERIFY THE NUT SIZE, THREAD TYPE, AND MATERIAL MATCH THE APPLICATION REQUIREMENT.
- ENSURE THE BASE MATERIAL IS DUCTILE AND SUITABLE FOR PRESS-IN INSTALLATION.
- PUNCH OR DRILL THE MOUNTING HOLE TO THE SPECIFIED DIAMETER AND TOLERANCE.
- CONFIRM THE HOLE IS HEXAGONAL OR ROUND AS REQUIRED AND FREE FROM BURRS OR CONTAMINATION.
- ALIGN THE HEX PRESS NUT WITH THE HOLE BEFORE INSERTION.
- INSERT THE PRESS NUT INTO THE HOLE FROM THE SPECIFIED INSTALLATION SIDE.
- ENSURE THE NUT FLANGE IS FLUSH AGAINST THE BASE MATERIAL SURFACE.
- USE A FLAT, PARALLEL PRESS TOOL OR HYDRAULIC PRESS FOR INSTALLATION.
- APPLY STEADY, AXIAL PRESS FORCE WITHOUT ROTATION.
- ALLOW THE BASE MATERIAL TO DEFORM AND LOCK THE NUT IN POSITION.
- DO NOT HAMMER OR APPLY IMPACT FORCE DURING INSTALLATION.
- VERIFY THE NUT IS FULLY SEATED AND FLUSH WITH THE MATERIAL SURFACE.
- CHECK THAT THE NUT DOES NOT SPIN OR PULL OUT AFTER INSTALLATION.
- AVOID OVER-PRESSING TO PREVENT PANEL DISTORTION OR THREAD DAMAGE.
- ENSURE THREADS ARE CLEAN AND UNDAMAGED AFTER INSTALLATION.
- INSPECT THE FINAL ASSEMBLY FOR ALIGNMENT, HOLDING STRENGTH, AND SURFACE FLATNESS.

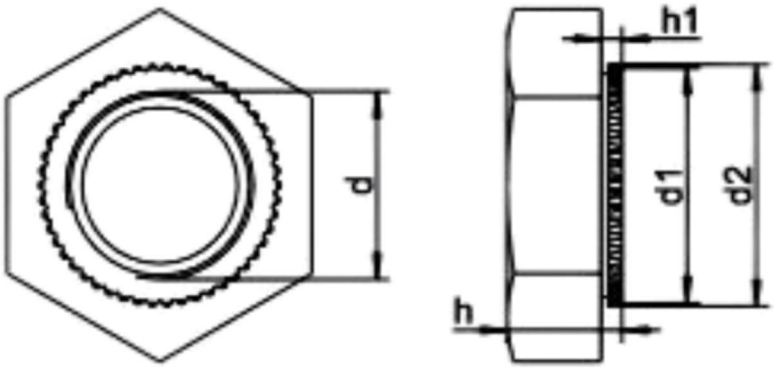

Quote the PART NUMBER given below with your order/ inquiries: All Dimensions in mm

Size (d)→	Part Number	h	SW (Across Flat)	d2	h1
M2x0.4	R4D15P02000	3.00	5.50	4.70	0.90
M2.5x0.45	R4D15P20500	3.00	5.50	4.70	0.90
M3x0.5	R4D15P03000	3.00	5.50	4.70	0.90
M4x0.7	R4D15P04000	3.20	7.00	5.70	0.90
M5x0.8	R4D15P05000	4.00	8.00	6.75	0.90
M6x1.0	R4D15P06000	5.00	10.00	8.30	0.90
M8x1.25	R4D15P08000	6.50	13.00	10.30	1.80
M10x1.5	R4D15P10000	8.00	15.00	12.85	1.80
M12x1.75	R4D15P12000	10.00	17.00	14.85	2.80
M16x2.0	R4D15P16000	13.00	22.00	18.85	3.40
M20x2.5	R4D15P20000	16.00	27.00	23.40	3.90

Sizes in BLUE are non-preferred. Availability is limited and MOQ is applied *Data is strictly informative*

Note: All Austenitic Stainless-Steel Fasteners may exhibit some Magnetic Properties due to the Manufacturing Process.
Refer: ISO 3506-2 Annex F