GST NO.: 29AHZPU5620Q1ZZ

An ISO 9001:2015 Certified Company

ROYAL INDUSTRIAL SUPPLIERS

QUALITY FASTENERS SPECIALIST

8310165941 / 9959457863 sales@royalfastenersindia.com www.royalfastenersindia.com

TECHNICAL DATA SHEET

SELF CLINCHING LOCK NUT LKS



MATERIAL- STAINLESS STEEL

GRADE-SS304 (A2)

AS PER-NON-STANDARD

CATALOGUE NO. R4S13

INSTALLATION GUIDE

- VERIFY THE NUT SIZE, THREAD PITCH, MATERIAL GRADE, AND PANEL THICKNESS BEFORE INSTALLATION.
- ENSURE THE SELF-CLINCHING LOCK NUT IS SUITABLE FOR THE PANEL MATERIAL AND APPLICATION.
- PREPARE THE MOUNTING HOLE ACCORDING TO THE MANUFACTURER'S SPECIFIED DIAMETER AND TOLERANCES.
- ENSURE THE MOUNTING HOLE IS CLEAN AND FREE FROM BURRS, DIRT, AND DEBRIS.
- POSITION THE NUT CORRECTLY IN THE PREPARED HOLE, ENSURING PROPER ALIGNMENT.
- INSTALL THE NUT USING A SUITABLE PRESS WITH THE RECOMMENDED INSTALLATION FORCE.
- ENSURE THE NUT IS PRESSED STRAIGHT INTO THE PANEL WITHOUT TILTING OR MISALIGNMENT.
- APPLY PRESSURE TO THE DESIGNATED BEARING AREA AS SPECIFIED BY THE MANUFACTURER.
- AVOID HAMMERING OR USING EXCESSIVE FORCE, AS THIS MAY DAMAGE THE NUT OR PANEL.
- ENSURE THE NUT IS FULLY SEATED AND FIRMLY SECURED IN THE PANEL.
- DO NOT INSTALL THE NUT INTO A HARDENED OR UNSUITABLE PANEL MATERIAL THAT MAY PREVENT PROPER CLINCHING.
- CHECK THAT THE NUT DOES NOT ROTATE OR PULL OUT AFTER INSTALLATION.
- VERIFY THREAD CONDITION AND PROPER SCREW ENGAGEMENT BEFORE FINAL ASSEMBLY.
- INSPECT THE FINISHED ASSEMBLY FOR PROPER SEATING, ALIGNMENT, AND DAMAGE-FREE INSTALLATION.

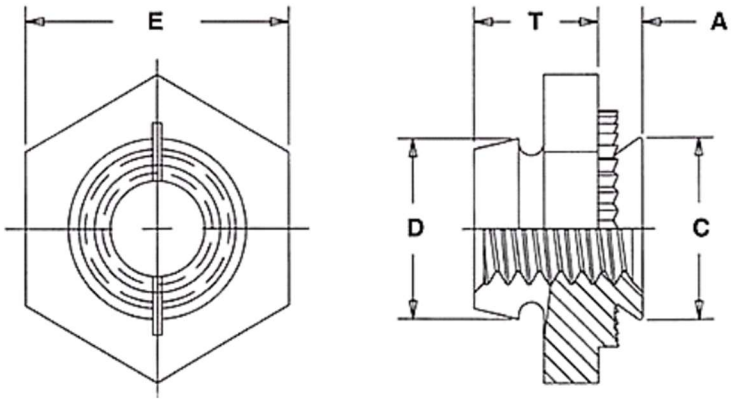

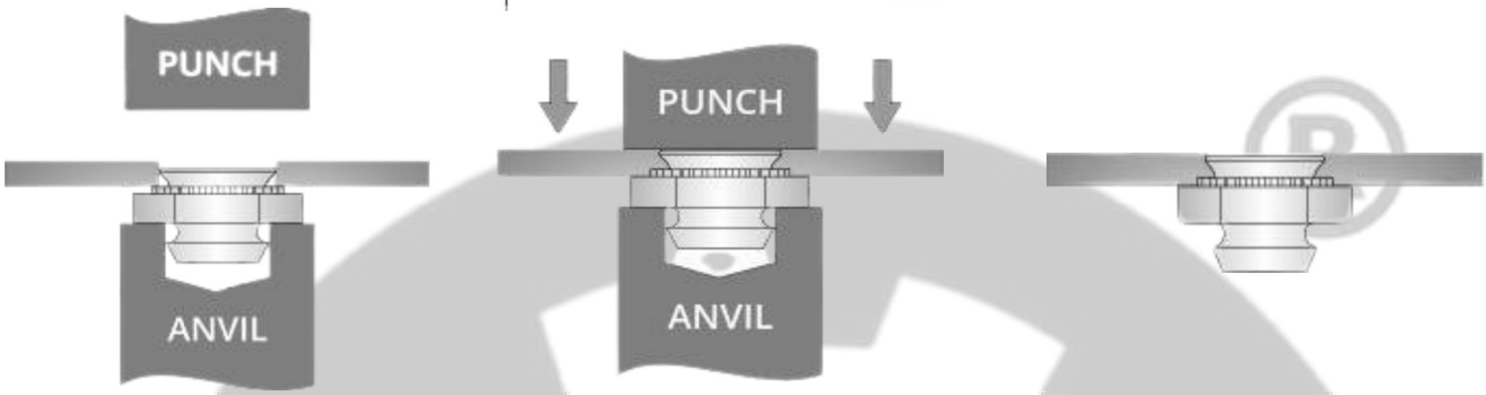

Note: For use in steel sheets max HRB 70

Size →	M2.5x0.45	M3x0.5	M4x0.7	M5x0.8
C max	4.38	4.76	6.76	7.94
D max	4.45	4.85	6.20	7.40
E (Across Flat) nom	6.35	6.35	8.73	9.53
T ± 0.25	3.43	3.43	4.45	5.21
Hole size in sheet + 0.08	4.37	4.75	6.76	7.92
Min dist hole centre to edge	3.90	4.00	5.20	5.60

Quote the PART NUMBER given below with your order/ inquiries: All Dimensions in mm

Size	Shank Code	PART NUMBER	Sheet Thickness		Shank A	Installation Force kN		Pushout Force N	
			Min	Max		AL	ST	AL	ST
M2.5x0.45	1	R4S1320501	1	0.97	7.00	13.00	560	650	
	2	R4S1320502	1.4	1.38	8.70	13.00	650	690	
M3x0.5	1	R4S1303001	1	0.97	7.00	13.00	560	650	
	2	R4S1303002	1.4	1.38	8.70	13.00	870	1080	
M4x0.7	1	R4S1304001	1	0.97	11.80	17.50	650	825	
	2	R4S1304002	1.4	1.38	13.00	18.70	1080	1310	
M5x0.8	1	R4S1305001	1	0.97	14.00	17.50	650	1080	
	2	R4S1305002	1.4	1.38	14.00	18.70	1080	1310	

Sizes in BLUE are non-preferred. Availability is limited and MOQ is applied *Data is strictly informative*

Note: All Austenitic Stainless-Steel Fasteners may exhibit some Magnetic Properties due to the Manufacturing Process.
Refer: ISO 3506-2 Annex F