GST NO.: 29AHZPU5620Q1ZZ

An ISO 9001:2015 Certified Company

ROYAL INDUSTRIAL SUPPLIERS

QUALITY FASTENERS SPECIALIST

8310165941 / 9959457863 sales@royalfastenersindia.com www.royalfastenersindia.com

TECHNICAL DATA SHEET

PAN HEAD SLOTTED



MATERIAL- STAINLESS STEEL

GRADE-SS316 (A4-70)

AS PER- DIN-85

CATALOGUE NO. R6B14

INSTALLATION GUIDE

- **SELECT THE CORRECT SIZE OF PAN HEAD SLOTTED SCREW AND MATCHING FLATHEAD SCREWDRIVER.**
- **ENSURE THE MATING HOLE OR THREAD IS CLEAN AND FREE FROM DUST, OIL, OR DEBRIS.**
- **ALIGN THE COMPONENTS TO BE FASTENED IN PROPER POSITION.**
- **INSERT THE PAN HEAD SLOTTED SCREW INTO THE HOLE BY HAND TO START THREADING.**
- **PLACE THE FLATHEAD SCREWDRIVER FIRMLY INTO THE SCREW SLOT.**
- **TURN THE SCREWDRIVER CLOCKWISE TO TIGHTEN THE SCREW.**
- **APPLY STEADY, CONTROLLED FORCE TO AVOID SLIPPING (CAM-OUT) AND DAMAGING THE SLOT.**
- **DO NOT OVERTIGHTEN TO PREVENT STRIPPING OF THREADS OR DAMAGING THE MATERIAL.**
- **USE A WASHER IF REQUIRED TO DISTRIBUTE LOAD AND PREVENT SURFACE DAMAGE.**
- **INSPECT TO ENSURE THE PAN HEAD SLOTTED SCREW IS SECURE AND PROPERLY SEATED ON THE SURFACE.**

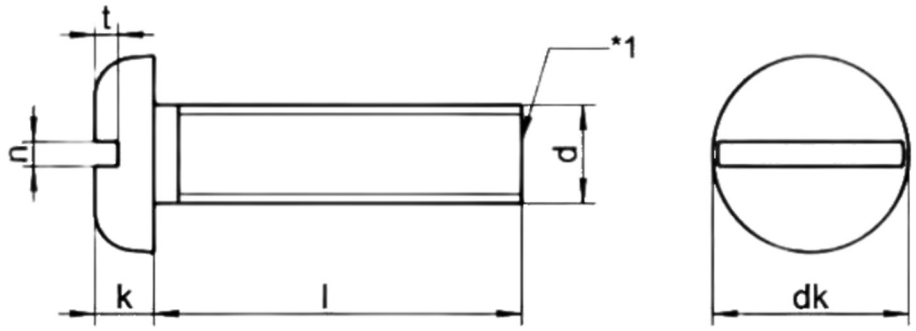

Note: Head Dimensions similar to ISO 1580 except in M3 and M5

Parameter↓ Size→	M1.6x0.35	M2x0.4	M2.5x0.45	M3x0.5	M3.5x0.6	M4x0.7
dk max	4.00	4.00	5.00	6.00	7.00	8.00
dk min	3.70	3.70	4.70	5.70	6.64	7.64
k max	1.30	1.30	1.50	1.80	2.10	2.40
k min	1.16	1.16	1.36	1.66	1.96	2.26
t min	0.50	0.50	0.60	0.70	0.80	1.00
n nom	0.50	0.50	0.60	0.80	1.00	1.20
Length Tolerance	≤ 3mm ±0.20/4 - 6mm ±0.24/7-10mm ±0.29/11-16mm ±0.35 20-30mm ±0.42/35-50mm ±0.50					

Quote the PART NUMBER given below with your order/ inquiries: All Dimensions in mm

Length↓ Size→	M1.6x0.35	M2x0.4	M2.5x0.45	M3x0.5	M3.5x0.6
3	R6B1410603	R6B1402003	R6B1420503	R6B1403003	
4	R6B1410604	R6B1402004	R6B1420504	R6B1403004	
5	R6B1410605	R6B1402005	R6B1420505	R6B1403005	R6B1430505
6	R6B1410606	R6B1402006	R6B1420506	R6B1403006	R6B1430506
8	R6B1410608	R6B1402008	R6B1420508	R6B1403008	R6B1430508
10	R6B1410610	R6B1402010	R6B1420510	R6B1403010	R6B1430510
12	R6B1410612	R6B1402012	R6B1420512	R6B1403012	R6B1430512
14	R6B1410614	R6B1402014	R6B1420514	R6B1403014	R6B1430514
16	R6B1410616	R6B1402016	R6B1420516	R6B1403016	R6B1430516
18	R6B1410618	R6B1402018	R6B1420518	R6B1403018	R6B1430518
20	R6B1410620	R6B1402020	R6B1420520	R6B1403020	R6B1430520
22			R6B1420522	R6B1403022	R6B1430522
25			R6B1420525	R6B1403025	
30				R6B1403030	
35				R6B1403035	
40				R6B1403040	
45				R6B1403045	
50				R6B1403050	
55				R6B1403055	
60				R6B1403060	

Sizes in BLUE are non-preferred. Availability is limited and MOQ is applied *Data is strictly informative*

Note: All Austenitic Stainless-Steel Fasteners may exhibit some Magnetic Properties due to the Manufacturing Process.
Refer: ISO 3506-2 Annex F

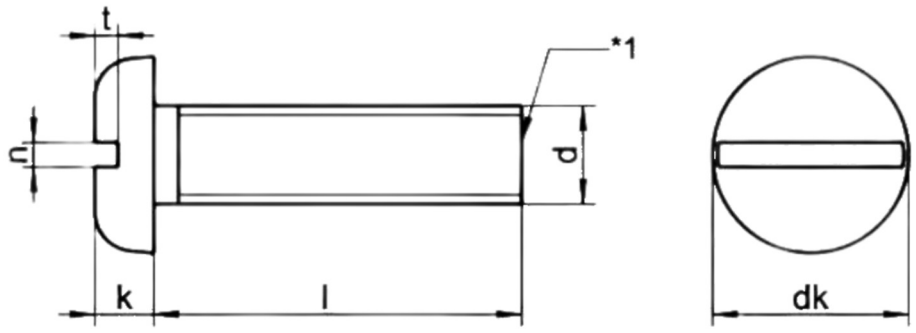

Note: Head Dimensions similar to ISO 1580 except in M3 and M5

Parameter↓ Size→	M5x0.8	M6x1.0	M8x1.25	M10x1.5
dk max	10.00	12.00	16.00	20.00
dk min	9.14	11.57	15.57	19.48
k max	3.00	3.60	4.80	6.00
k min	2.86	3.30	4.50	5.70
t min	1.20	1.40	1.90	2.40
n nom	1.20	1.60	2.00	2.50
Length Tolerance	≤ 3mm ±0.20/4 - 6mm ±0.24/7-10mm ±0.29/11-16mm ±0.35/20-30mm ±0.42/35-50mm ±0.50			

Quote the PART NUMBER given below with your order/ inquiries: All Dimensions in mm

Length↓ Size→	M5x0.8	M6x1.0	M8x1.25	M10x1.5
6	R6B1405006	R6B1406008		
8	R6B1405008	R6B1406008		
10	R6B1405010	R6B1406010	R6B1408010	
12	R6B1405012	R6B1406012	R6B1408012	R6B1410012
14	R6B1405014	R6B1406014	R6B1408014	R6B1410014
16	R6B1405016	R6B1406016	R6B1408016	R6B1410016
18	R6B1405018	R6B1406018	R6B1408018	R6B1410018
20	R6B1405020	R6B1406020	R6B1408020	R6B1410020
22	R6B1405022	R6B1406022	R6B1408022	R6B1410022
25	R6B1405025	R6B1406025	R6B1408025	R6B1410025
30	R6B1405030	R6B1406030	R6B1408030	R6B1410030
35	R6B1405035	R6B1406035	R6B1408035	R6B1410035
40	R6B1405040	R6B1406040	R6B1408040	R6B1410040
45	R6B1405045	R6B1406045	R6B1408045	R6B1410045
50	R6B1405050	R6B1406050	R6B1408050	R6B1410050
55	R6B1405055	R6B1406055	R6B1408055	R6B1410055
60	R6B1405060	R6B1406060	R6B1408060	R6B1410060
70	R6B1405070	R6B1406070	R6B1408070	
80		B4B0206080	R6B1408080	
90		R6B1406090	R6B1408090	
100		R6B1406100	R6B1408100	

Sizes in BLUE are non-preferred. Availability is limited and MOQ is applied *Data is strictly informative*

Note: All Austenitic Stainless-Steel Fasteners may exhibit some Magnetic Properties due to the Manufacturing Process.
Refer: ISO 3506-2 Annex F