GST NO.: 29AHZPU5620Q1ZZ

An ISO 9001:2015 Certified Company

ROYAL INDUSTRIAL SUPPLIERS

QUALITY FASTENERS SPECIALIST

8310165941 / 9959457863 sales@royalfastenersindia.com www.royalfastenersindia.com

TECHNICAL DATA SHEET

PAN HEAD SLOTTED



MATERIAL- STAINLESS STEEL

GRADE-SS304 (A2-70)

AS PER- DIN-85

CATALOGUE NO. R4B14

INSTALLATION GUIDE

- **SELECT THE CORRECT SIZE OF PAN HEAD SLOTTED SCREW AND MATCHING FLATHEAD SCREWDRIVER.**
- **ENSURE THE MATING HOLE OR THREAD IS CLEAN AND FREE FROM DUST, OIL, OR DEBRIS.**
- **ALIGN THE COMPONENTS TO BE FASTENED IN PROPER POSITION.**
- **INSERT THE PAN HEAD SLOTTED SCREW INTO THE HOLE BY HAND TO START THREADING.**
- **PLACE THE FLATHEAD SCREWDRIVER FIRMLY INTO THE SCREW SLOT.**
- **TURN THE SCREWDRIVER CLOCKWISE TO TIGHTEN THE SCREW.**
- **APPLY STEADY, CONTROLLED FORCE TO AVOID SLIPPING (CAM-OUT) AND DAMAGING THE SLOT.**
- **DO NOT OVERTIGHTEN TO PREVENT STRIPPING OF THREADS OR DAMAGING THE MATERIAL.**
- **USE A WASHER IF REQUIRED TO DISTRIBUTE LOAD AND PREVENT SURFACE DAMAGE.**
- **INSPECT TO ENSURE THE PAN HEAD SLOTTED SCREW IS SECURE AND PROPERLY SEATED ON THE SURFACE.**

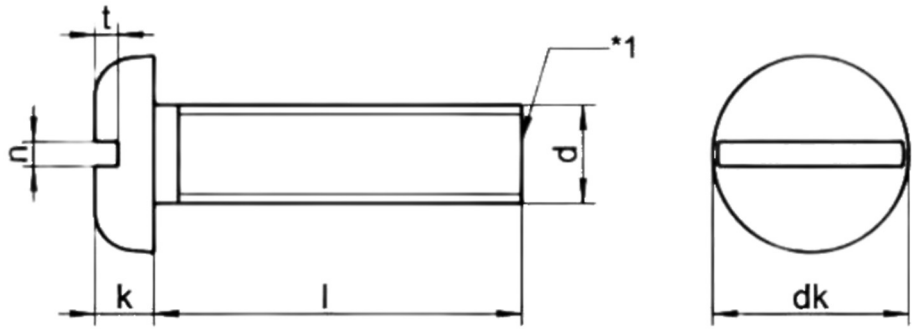

Note: Head Dimensions similar to ISO 1580 except in M3 and M5

Parameter↓ Size→	M1.6x0.35	M2x0.4	M2.5x0.45	M3x0.5	M3.5x0.6	M4x0.7
dk max	4.00	4.00	5.00	6.00	7.00	8.00
dk min	3.70	3.70	4.70	5.70	6.64	7.64
k max	1.30	1.30	1.50	1.80	2.10	2.40
k min	1.16	1.16	1.36	1.66	1.96	2.26
t min	0.50	0.50	0.60	0.70	0.80	1.00
n nom	0.50	0.50	0.60	0.80	1.00	1.20
Length Tolerance	≤ 3mm ±0.20/4 - 6mm ±0.24/7-10mm ±0.29/11-16mm ±0.35 20-30mm ±0.42/35-50mm ±0.50					

Quote the PART NUMBER given below with your order/ inquiries: All Dimensions in mm

Length↓ Size→	M1.6x0.35	M2x0.4	M2.5x0.45	M3x0.5	M3.5x0.6
3	R4B1410603	R4B1402003	R4B1420503	R4B1403003	
4	R4B1410604	R4B1402004	R4B1420504	R4B1403004	
5	R4B1410605	R4B1402005	R4B1420505	R4B1403005	R4B1430505
6	R4B1410606	R4B1402006	R4B1420506	R4B1403006	R4B1430506
8	R4B1410608	R4B1402008	R4B1420508	R4B1403008	R4B1430508
10	R4B1410610	R4B1402010	R4B1420510	R4B1403010	R4B1430510
12	R4B1410612	R4B1402012	R4B1420512	R4B1403012	R4B1430512
14	R4B1410614	R4B1402014	R4B1420514	R4B1403014	R4B1430514
16	R4B1410616	R4B1402016	R4B1420516	R4B1403016	R4B1430516
18	R4B1410618	R4B1402018	R4B1420518	R4B1403018	R4B1430518
20	R4B1410620	R4B1402020	R4B1420520	R4B1403020	R4B1430520
22			R4B1420522	R4B1403022	R4B1430522
25			R4B1420525	R4B1403025	
30				R4B1403030	
35				R4B1403035	
40				R4B1403040	
45				R4B1403045	
50				R4B1403050	
55				R4B1403055	
60				R4B1403060	

Sizes in BLUE are non-preferred. Availability is limited and MOQ is applied *Data is strictly informative*

Note: All Austenitic Stainless-Steel Fasteners may exhibit some Magnetic Properties due to the Manufacturing Process.
Refer: ISO 3506-2 Annex F

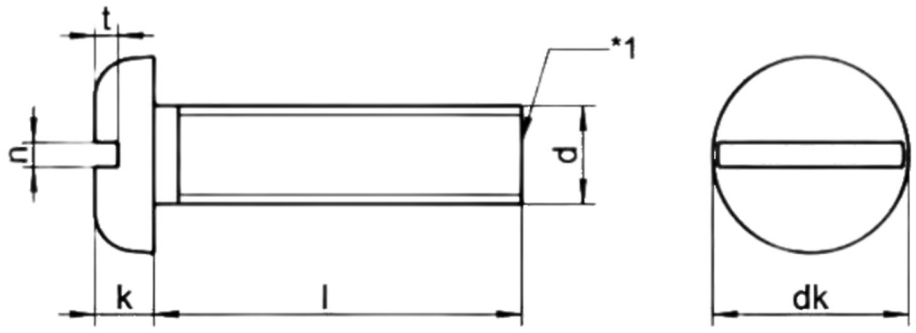

Note: Head Dimensions similar to ISO 1580 except in M3 and M5

Parameter↓ Size→	M5x0.8	M6x1.0	M8x1.25	M10x1.5
dk max	10.00	12.00	16.00	20.00
dk min	9.14	11.57	15.57	19.48
k max	3.00	3.60	4.80	6.00
k min	2.86	3.30	4.50	5.70
t min	1.20	1.40	1.90	2.40
n nom	1.20	1.60	2.00	2.50
Length Tolerance	≤ 3mm ±0.20/4 - 6mm ±0.24/7-10mm ±0.29/11-16mm ±0.35/20-30mm ±0.42/35-50mm ±0.50			

Quote the PART NUMBER given below with your order/ inquiries: All Dimensions in mm

Length↓ Size→	M5x0.8	M6x1.0	M8x1.25	M10x1.5
6	R4B1405006	R4B1406008		
8	R4B1405008	R4B1406008		
10	R4B1405010	R4B1406010	R4B1408010	
12	R4B1405012	R4B1406012	R4B1408012	R4B1410012
14	R4B1405014	R4B1406014	R4B1408014	R4B1410014
16	R4B1405016	R4B1406016	R4B1408016	R4B1410016
18	R4B1405018	R4B1406018	R4B1408018	R4B1410018
20	R4B1405020	R4B1406020	R4B1408020	R4B1410020
22	R4B1405022	R4B1406022	R4B1408022	R4B1410022
25	R4B1405025	R4B1406025	R4B1408025	R4B1410025
30	R4B1405030	R4B1406030	R4B1408030	R4B1410030
35	R4B1405035	R4B1406035	R4B1408035	R4B1410035
40	R4B1405040	R4B1406040	R4B1408040	R4B1410040
45	R4B1405045	R4B1406045	R4B1408045	R4B1410045
50	R4B1405050	R4B1406050	R4B1408050	R4B1410050
55	R4B1405055	R4B1406055	R4B1408055	R4B1410055
60	R4B1405060	R4B1406060	R4B1408060	R4B1410060
70	R4B1405070	R4B1406070	R4B1408070	
80		B4B0206080	R4B1408080	
90		R4B1406090	R4B1408090	
100		R4B1406100	R4B1408100	

Sizes in BLUE are non-preferred. Availability is limited and MOQ is applied *Data is strictly informative*

Note: All Austenitic Stainless-Steel Fasteners may exhibit some Magnetic Properties due to the Manufacturing Process.
Refer: ISO 3506-2 Annex F